Uncontrolled Copy
This is an uncontrolled copy - document subject to change - alterations reserved without notice

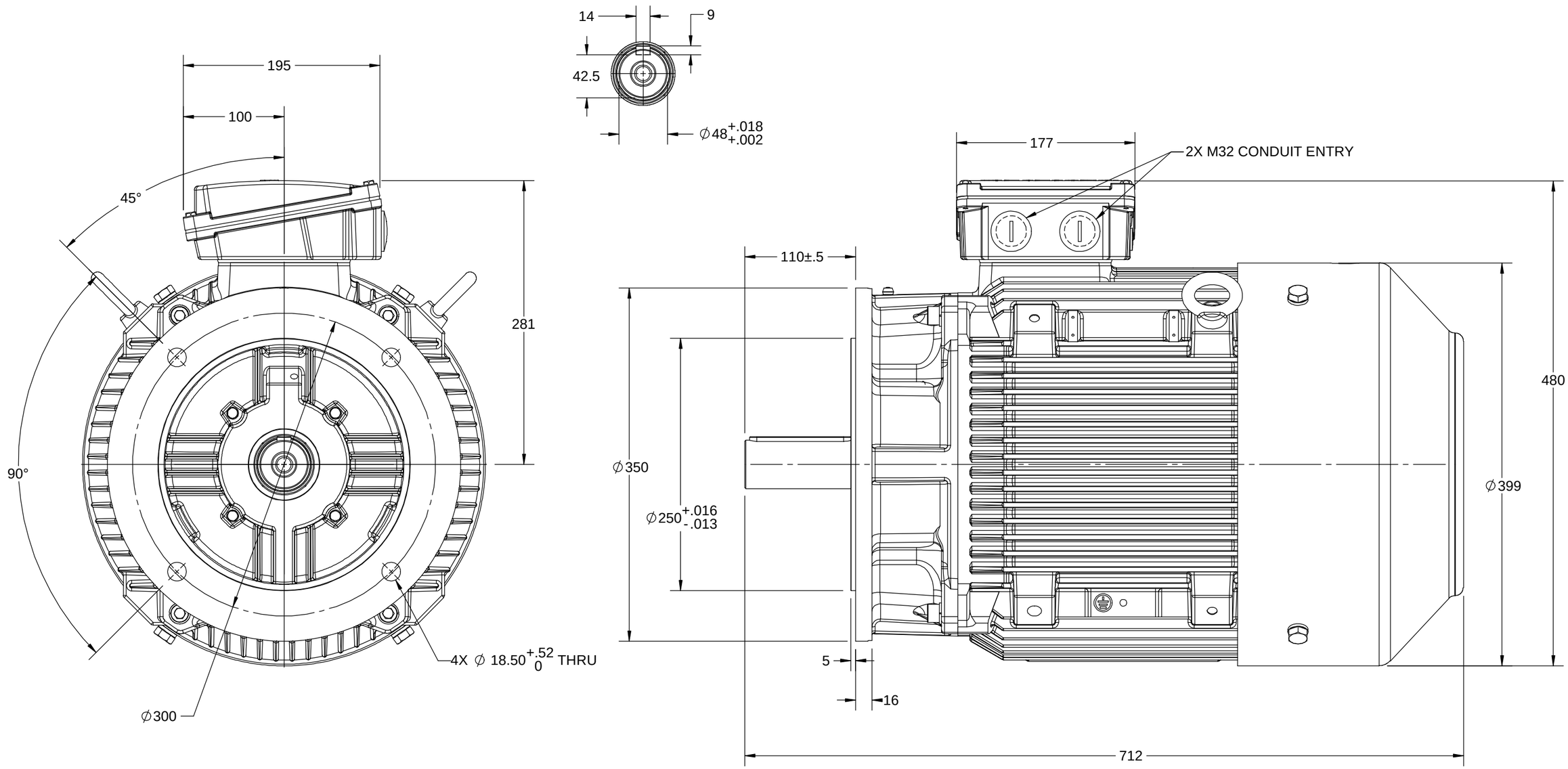

DRAWING REVISION C	REVISION BY S.MUDDA	DATE 26/8/2020		DRAWN BY KCS	Regal Beloit America, Inc.
ECO ECO-0190270	APPROVED BY JAY	DATE 26/8/2020		DATE 19-03-2015	
ECO DESCRIPTION CONFIGURATIONS ADDED IN THE 3D MODEL				APPROVED BY SBD	DESCRIPTION OUTLINE 180M-2~8P-B5
				DATE 19-03-2015	
				REFERENCE	MATERIAL / PROCESS/FINISH
				THIRD ANGLE PROJECTION	SIZE B / DRAWING NUMBER 0218000574 / SHEET 1 OF 1

COPYRIGHT REGAL BELOIT AMERICA, INC. ALL RIGHTS RESERVED.
PROPRIETARY AND CONFIDENTIAL INFORMATION - THIS DOCUMENT IS THE PROPERTY OF REGAL BELOIT AMERICA, INC. ("OWNER") AND CONTAINS OWNER'S PROPRIETARY INFORMATION. ANY PERSON, CORPORATION OR OTHER FIRM RECEIVING IT IS DEEMED, BY RECEIVING IT, TO AGREE THAT IT, AND/OR ANY PART OF IT, SHALL NOT BE DISCLOSED TO ANY PERSON, CORPORATION OR OTHER ENTITY, DUPLICATED, AND/OR USED, EXCEPT AS EXPRESSLY APPROVED IN WRITING IN ADVANCE BY OWNER. THIS DOCUMENT SHALL BE RETURNED TO OWNER UPON REQUEST. IT MAY BE SUBJECT TO CERTAIN RESTRICTIONS UNDER APPLICABLE EXPORT CONTROL LAWS AND REGULATIONS.