THIS IS AN UNCONTROLLED COPY --- DOCUMENT SUBJECT TO CHANGE --- ALTERATIONS RESERVED WITHOUT NOTICE

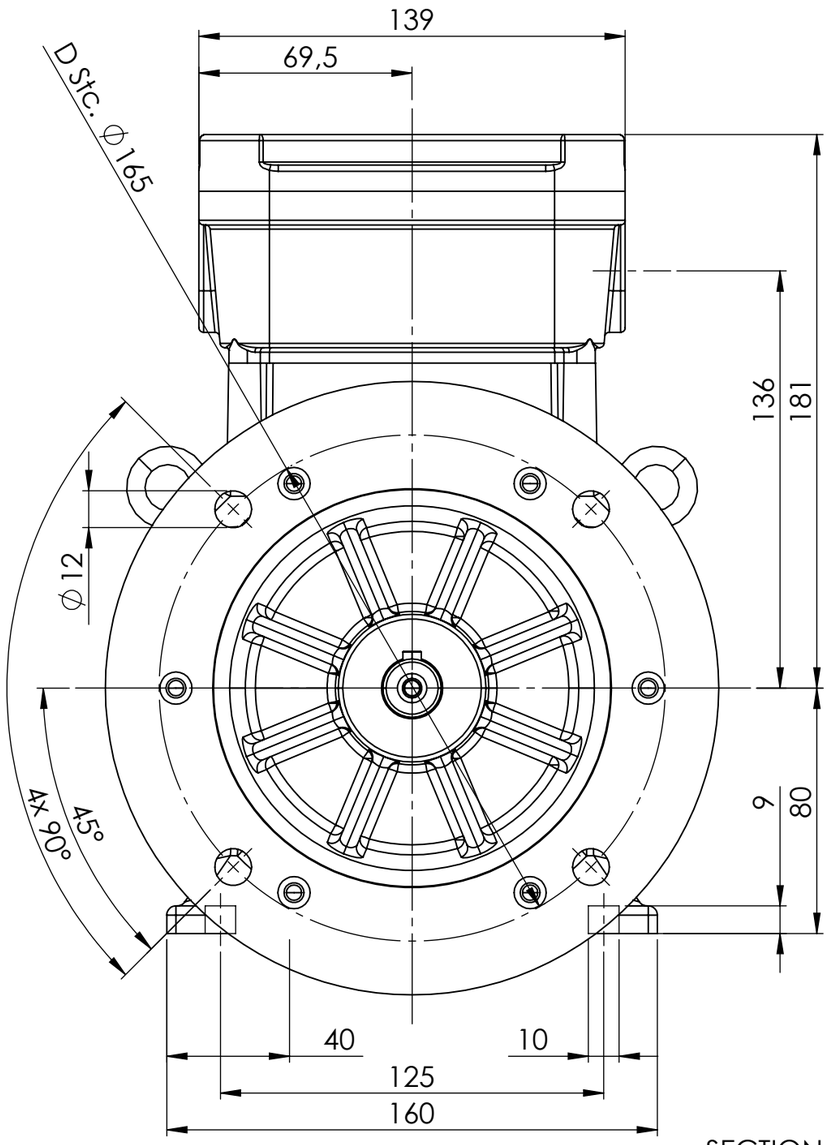

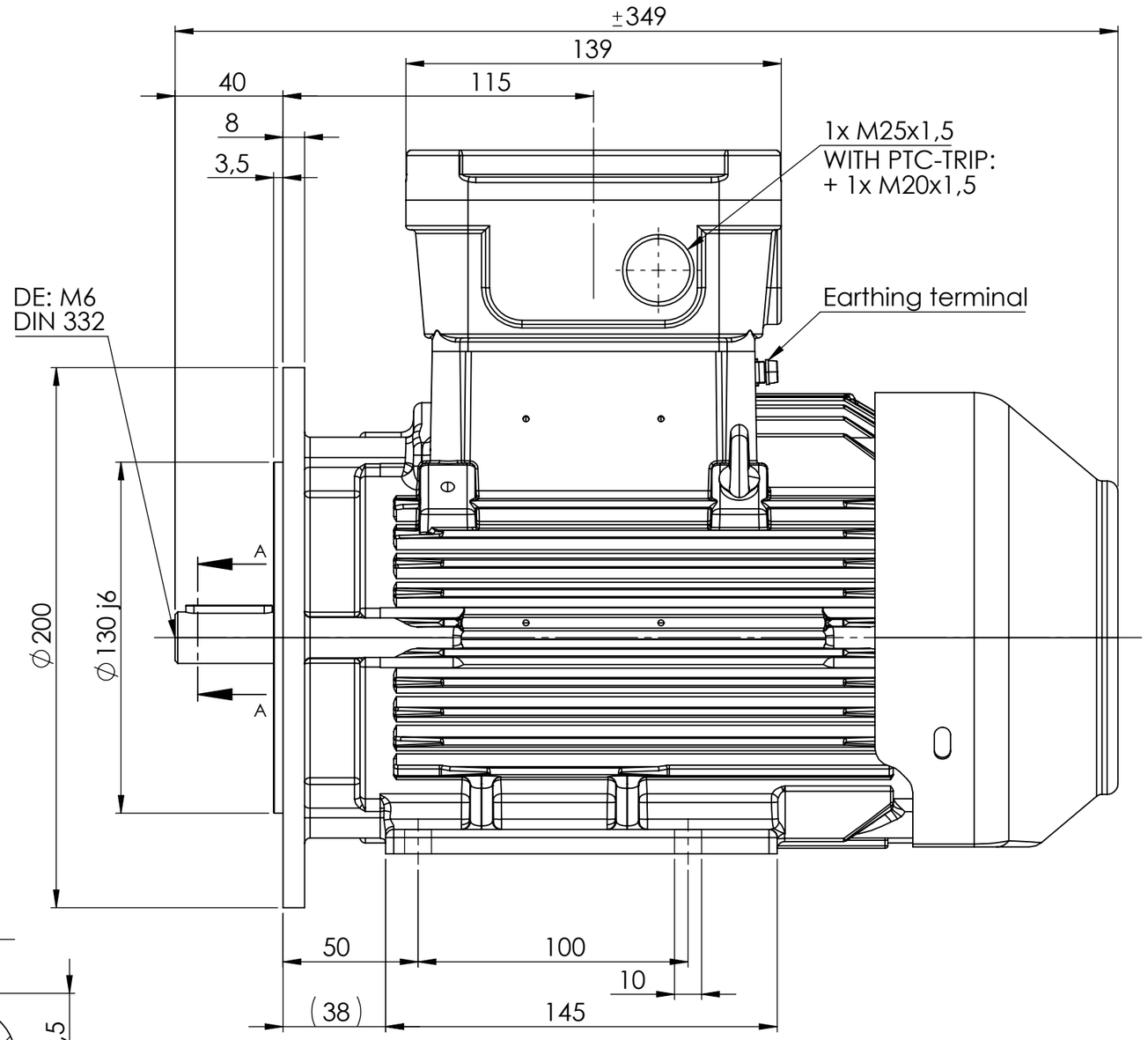

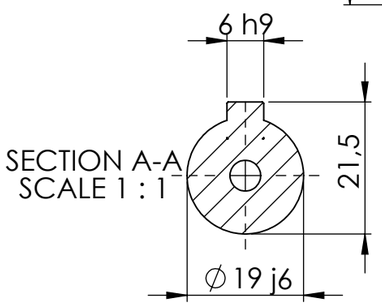

1x Earthing in terminal box
1x External earthing

DRAWN: BW	ROTOR BV, Mors 1-5, 7151 MX Eibergen NL; Tel: +31(0)545-464640; E-mail: sales.nl@regalrexnord.com	DRAWING NUMBER: 6RD80MB4E3 IM2001	REVISION
DATE: 23-07-2021		DESCRIPTION: Outline drawing	
CHK'D		OPTIONS:	
DATE	GENERAL TOLERANCE ON MACHINED PARTS: LINEAR DIM. ACC. DIN ISO 2768-1 m	ALL DIMENSIONS IN mm ACC. IEC/EN 60072-1	DO NOT SCALE DRAWING

GEN TOLERANCE OF FORM AND POSITION ON MACHINED PARTS: CLASS H - DIN ISO 2768-2			THIRD ANGLE PROJECTION	MOTOR TYPE	COOLING	PAPER SIZE
	0.5 - 3 ± 0.1	> 120 - 400 ± 0.5		6RD80MB4E3	IC411	A3
	> 3 - 6 ± 0.1	> 400 - 1000 ± 0.8		MOUNTING	PROTECTION	SCALE: 1:2
	> 6 - 30 ± 0.2	>1000 - 2000 ± 1.2		IM2001 / FF165	Ex db/eb	SHEET 1 OF 1
	> 30 - 120 ± 0.3	>2000 - 4000 ± 2				