THIS IS AN UNCONTROLLED COPY --- DOCUMENT SUBJECT TO CHANGE --- ALTERATIONS RESERVED WITHOUT NOTICE

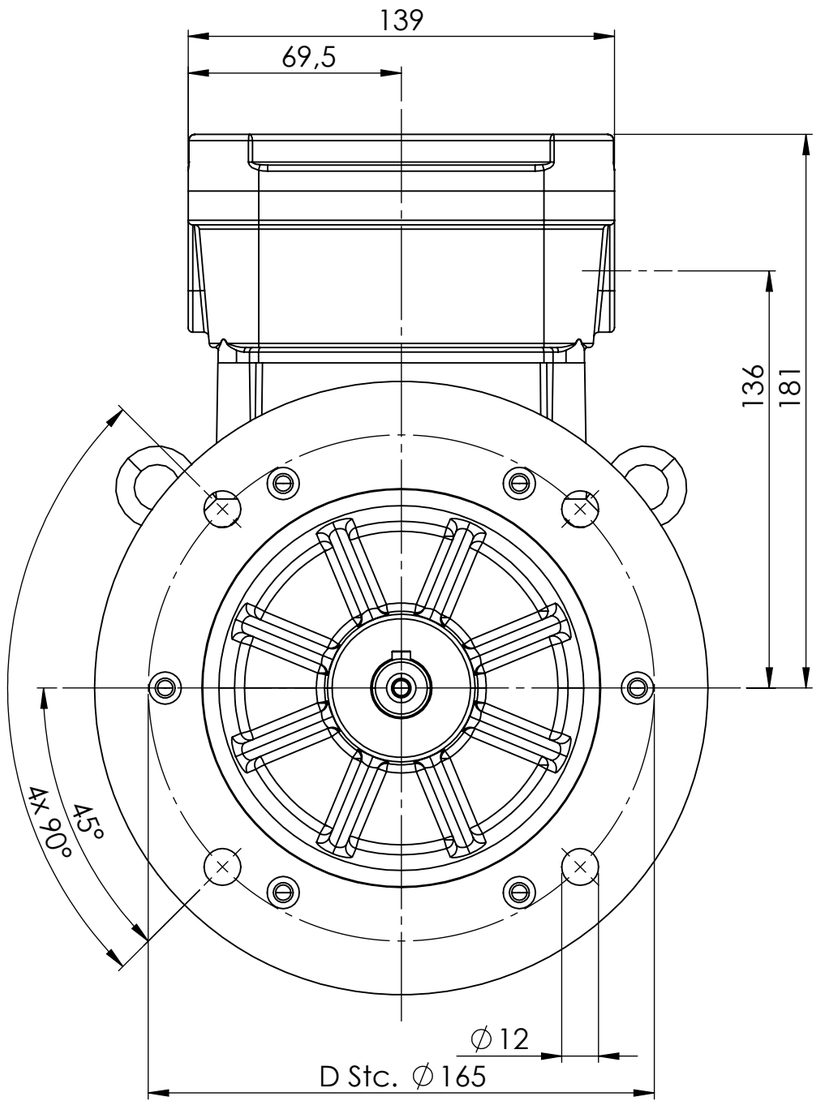

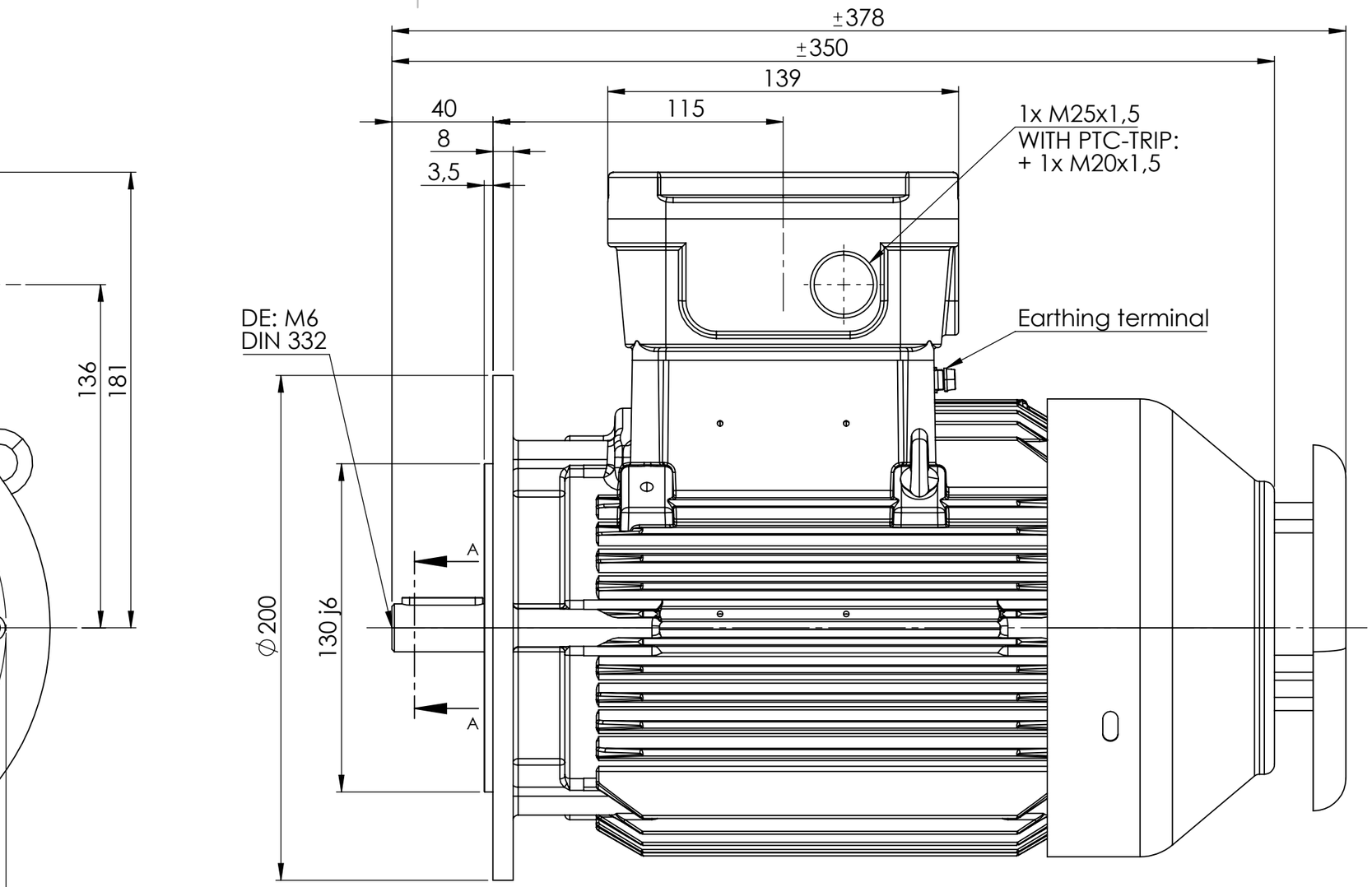

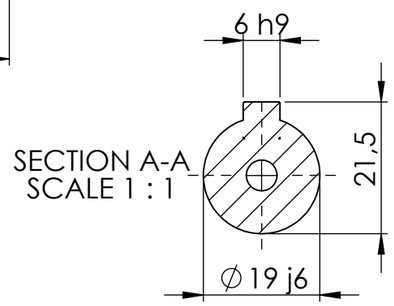

1x Earthing in terminal box
1x External earthing

DRAWN: BW	rotor RegalRexnord	DRAWING NUMBER: 6RD80MB4E3 IM3011	REVISION
DATE: 23-07-2021		DESCRIPTION: Outline drawing	
CHK'D	ROTOR BV, Mors 1-5, 7151 MX Eibergen NL; Tel: +31(0)545-464640, E-mail: sales.nl@regalrexnord.com	OPTIONS: With roof for vertical mounting	
DATE	GENERAL TOLERANCE ON MACHINED PARTS: LINEAR DIM. ACC. DIN ISO 2768-1 m	ALL DIMENSIONS IN mm ACC. IEC/EN 60072-1	DO NOT SCALE DRAWING

GEN TOLERANCE OF FORM AND POSITION ON MACHINED PARTS: CLASS H - DIN ISO 2768-2				THIRD ANGLE PROJECTION	MOTOR TYPE	COOLING	PAPER SIZE
	0.5 - 3	± 0.1	> 120 - 400	± 0.5	6RD80MB4E3	IC411	A3
	> 3 - 6	± 0.1	> 400 - 1000	± 0.8	MOUNTING	PROTECTION	SCALE: 1:2
	> 6 - 30	± 0.2	>1000 - 2000	± 1.2	IM3011 / FF165	Ex db/eb	SHEET 1 OF 1
	> 30 - 120	± 0.3	>2000 - 4000	± 2			