This is an uncontrolled copy - document subject to change - alterations reserved without notice

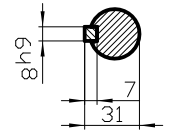

DIN 332-DR M10
DIN 6885 Teil1

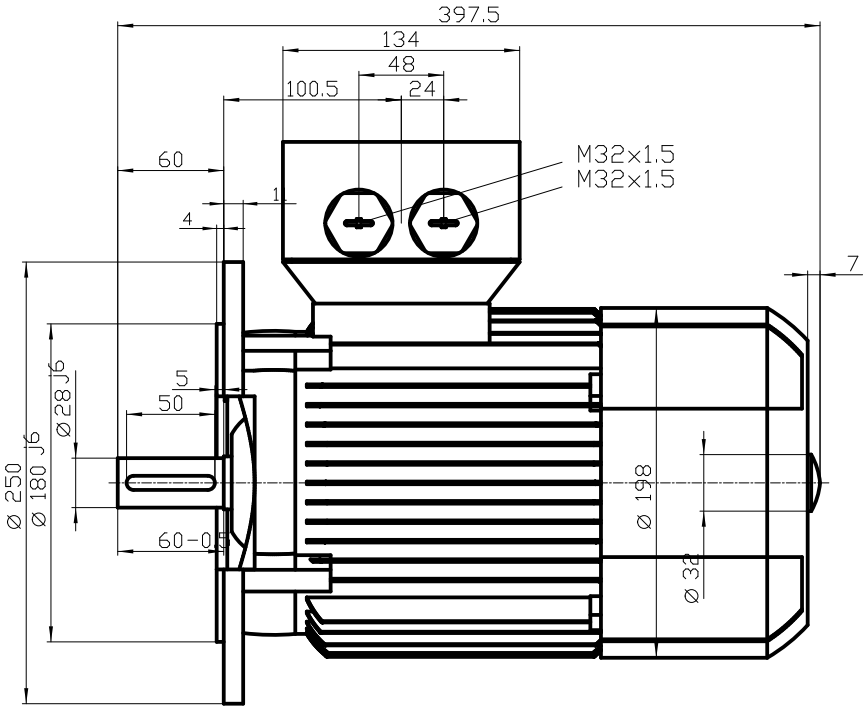

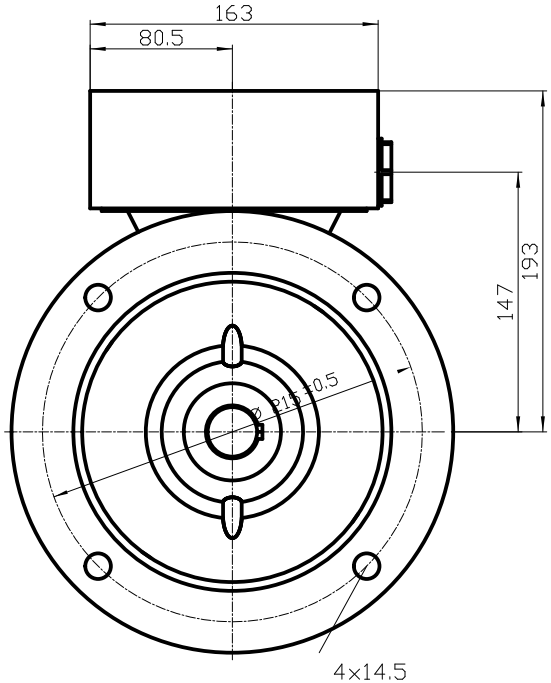

Unit	mm
Date	30.04.13

6RN100L04E25 B5

rotor