This is an uncontrolled copy - document subject to change - alterations reserved without notice

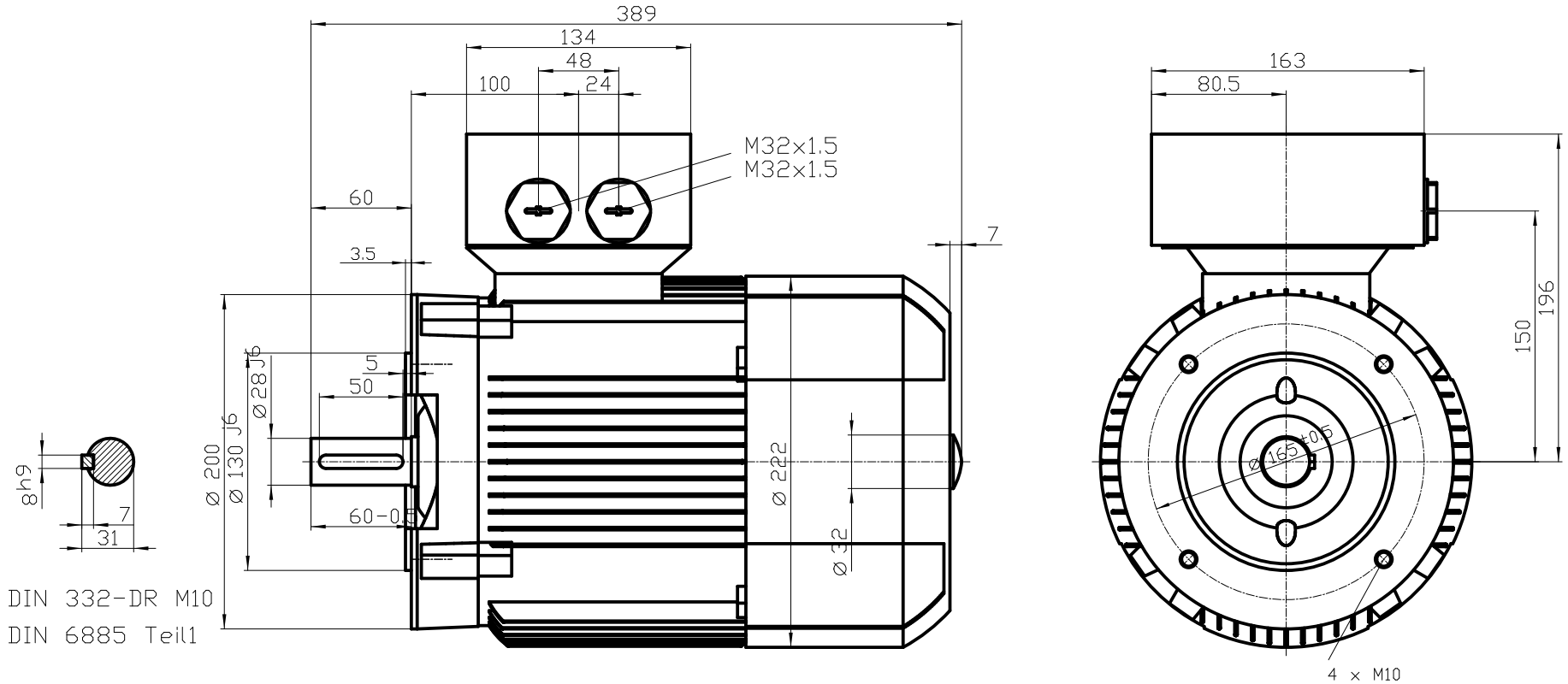

Unit	mm
Date	30.04.13

6RN112M02E22 B14B

rotor