This is an uncontrolled copy - document subject to change - alterations reserved without notice

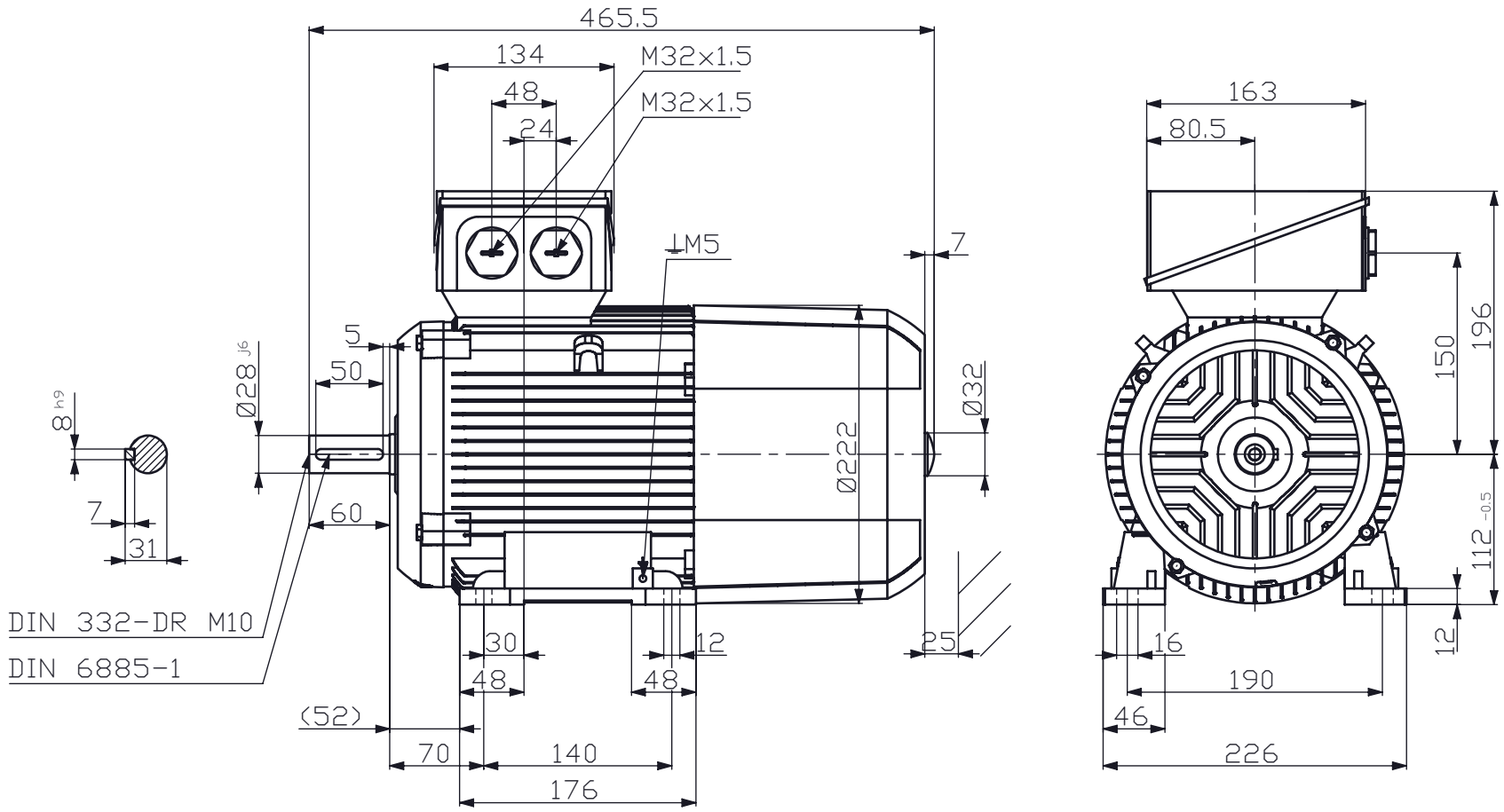

REVISIONS				
ZONE	REV.	DESCRIPTION	DATE	APPROVED

REGAL rotor
Mors 2, P.O.box 45
7150 AA Eibergen nl
Tel:+31(0)545 464640
E-mail: info@rotor.nl

MOTORTYPE: 6RN112M04E42		TITLE: Outline drawing		DRAWN:	DATE:
MOUNTING: IM1041		SPECIAL:		CHECKED:	
PROTECTION:		ART. NR.:		COMPLETE OR PARTIAL COPYING OR USE OF SPECIFICATIONS IS NOT ALLOWED WITHOUT OUR PERMISSION.	
COOLING: IC411		REVISION:			
REMARKS:					
DIMENSIONS: MM	SCALE: 1:5	PAPER SIZE: A4	PAGE 1 OF 1	SUBJECT TO ALTERATIONS	