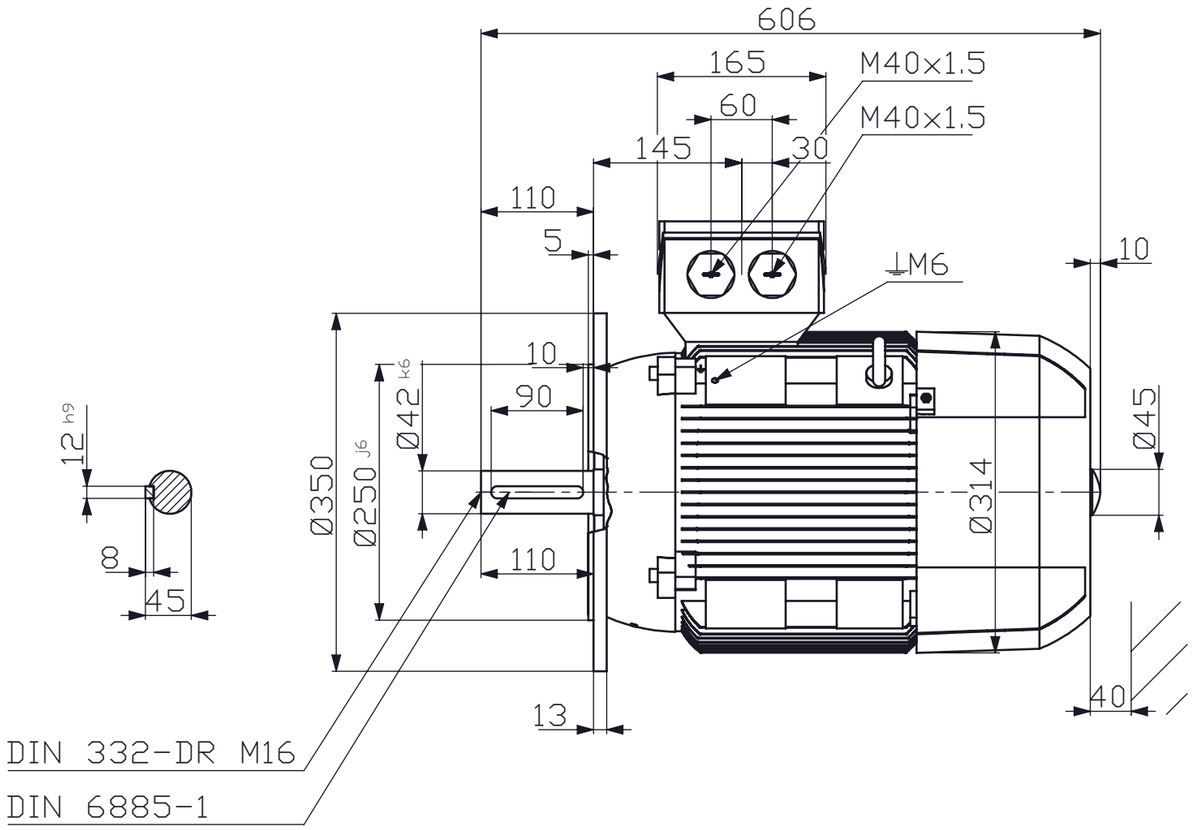

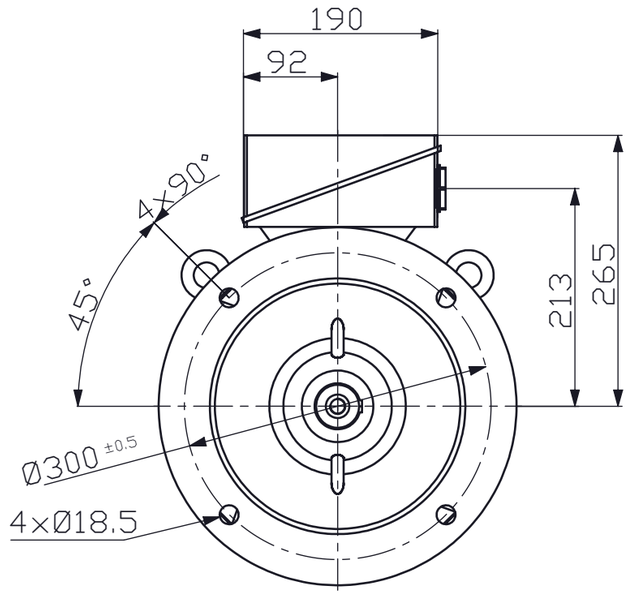

REVISIONS				
ZONE	REV.	DESCRIPTION	DATE	APPROVED

REGAL rotor
Mors 2, P.O.box 45
7150 AA Eibergen nl
Tel:+31(0)545 464640
E-mail: info@rotor.nl

MOTORTYPE: 6RN160M02E42
MOUNTING: IM3041
PROTECTION:
COOLING: IC411
REMARKS:
DIMENSIONS: MM SCALE: 1:6

TITLE: Outline drawing
SPECIAL:
ART. NR.:
REVISION:
PAPER SIZE: A3 PAGE 1 OF 1

DRAWN:
CHECKED:
DATE:

COMPLETE OR PARTIAL COPYING OR USE OF SPECIFICATIONS IS NOT ALLOWED WITHOUT OUR PERMISSION.
SUBJECT TO ALTERATIONS
ISO 9001
This is an uncontrolled copy - document subject to change - alterations reserved without notice