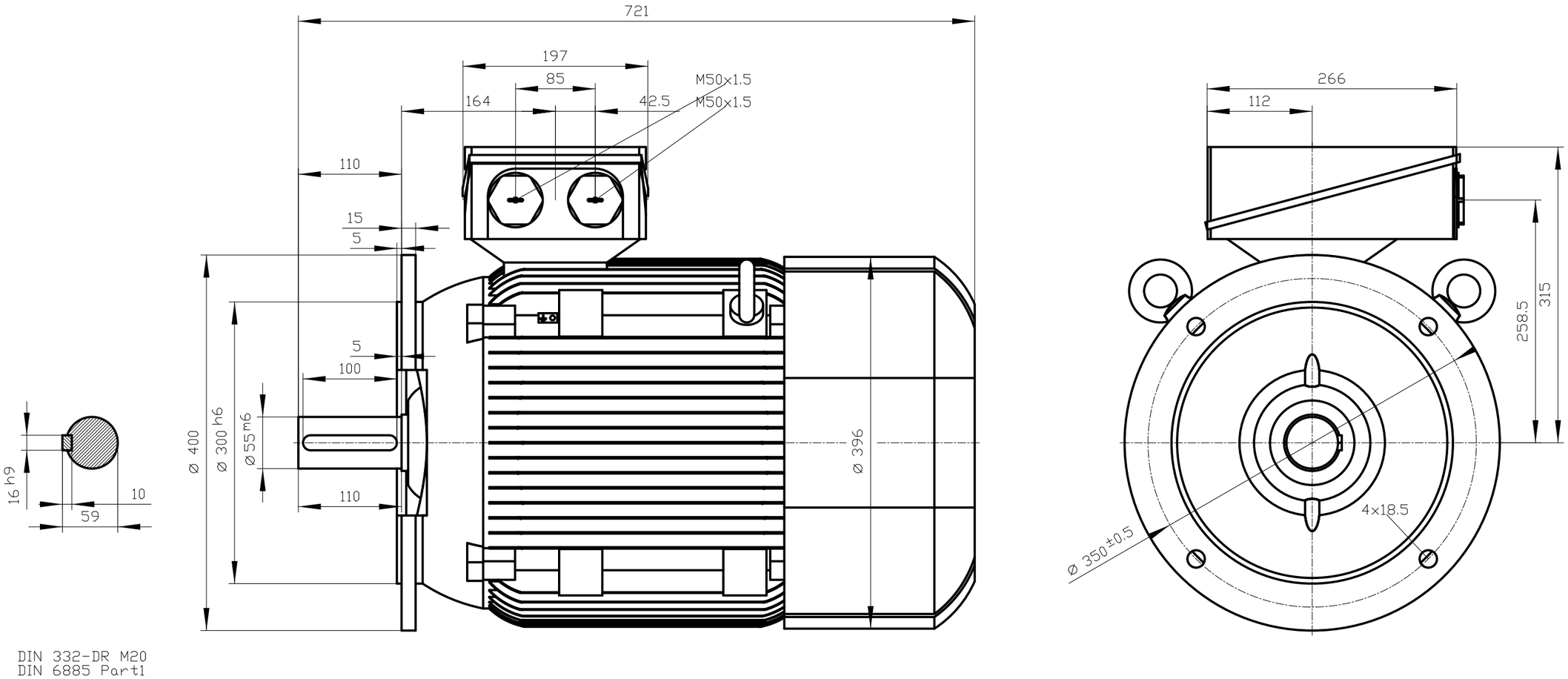

Unit	mm
Date	2/9/16

6RN200L02E14 IM3001

rotor

DT

This is an uncontrolled copy - document subject to change - alterations reserved without notice