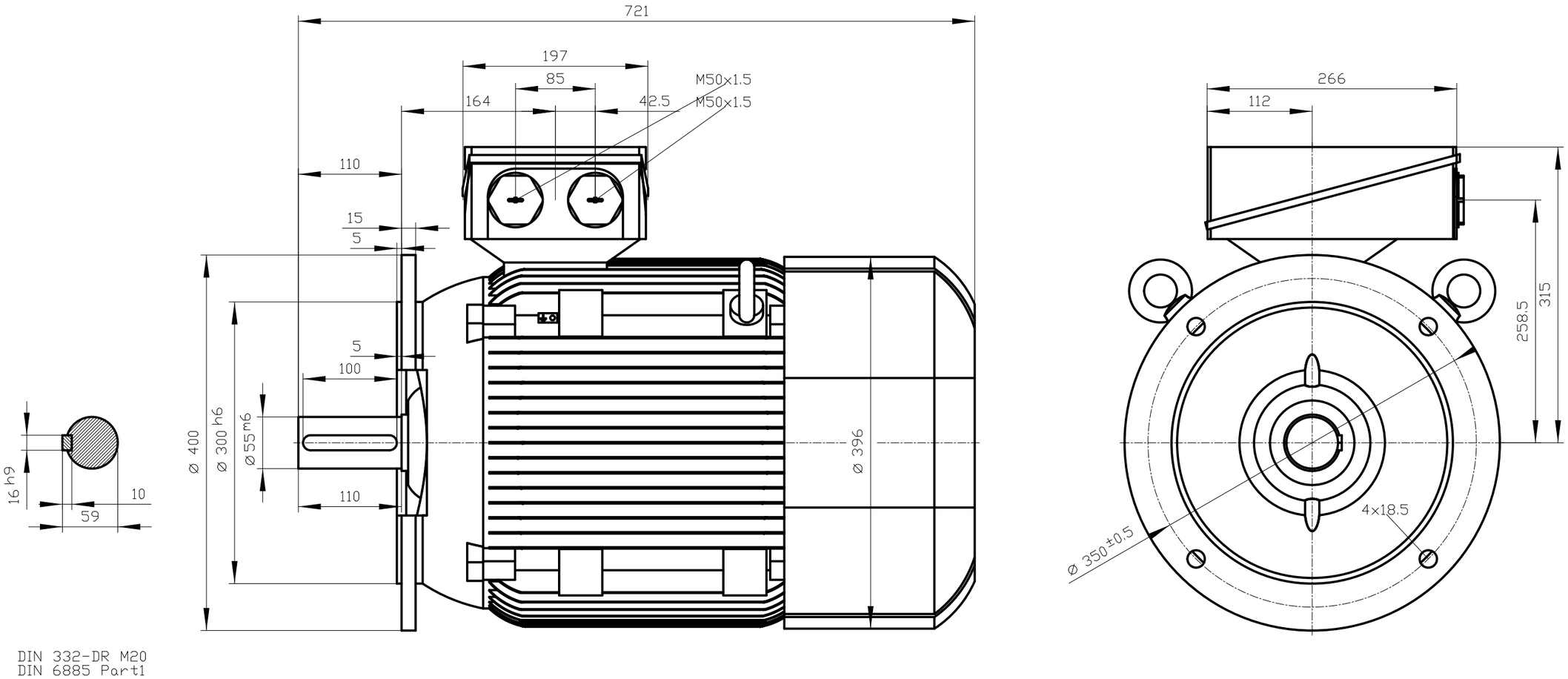

Unit	mm
Date	2/9/16

rotor

6RN200L06E14 IM3001

DT

This is an uncontrolled copy - document subject to change - alterations reserved without notice