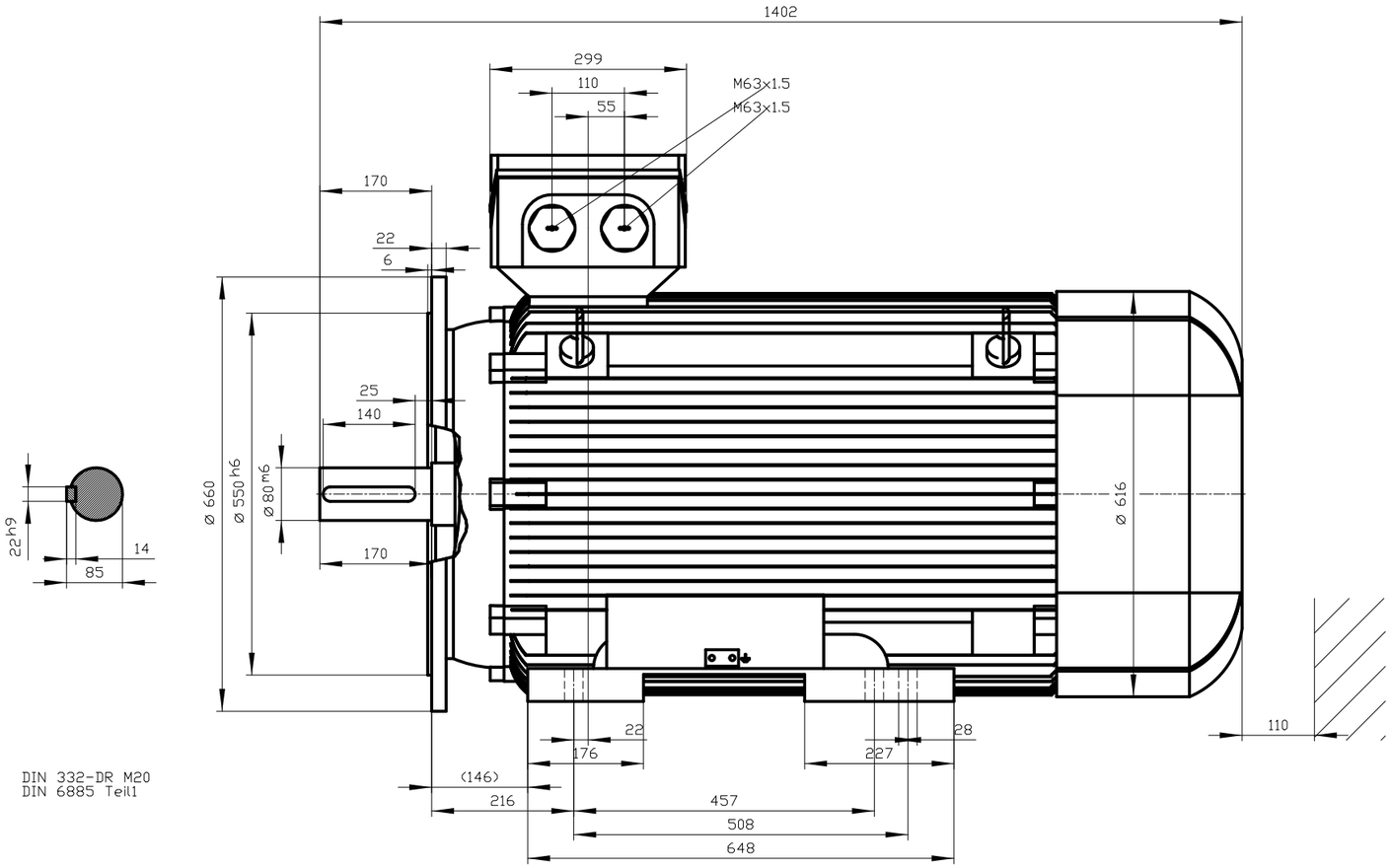

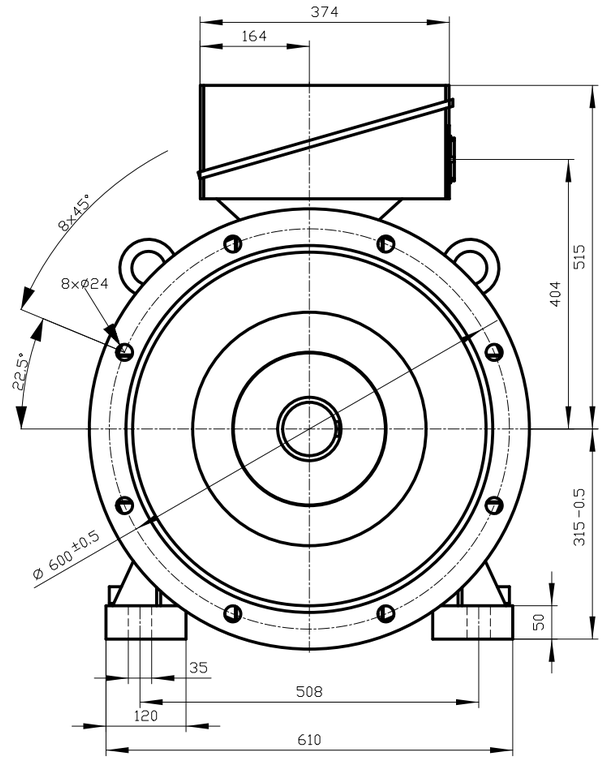

Unit	mm
Date	3/16/16

rotor

6RN315L04E25 IM2001

DT

This is an uncontrolled copy - document subject to change - alterations reserved without notice