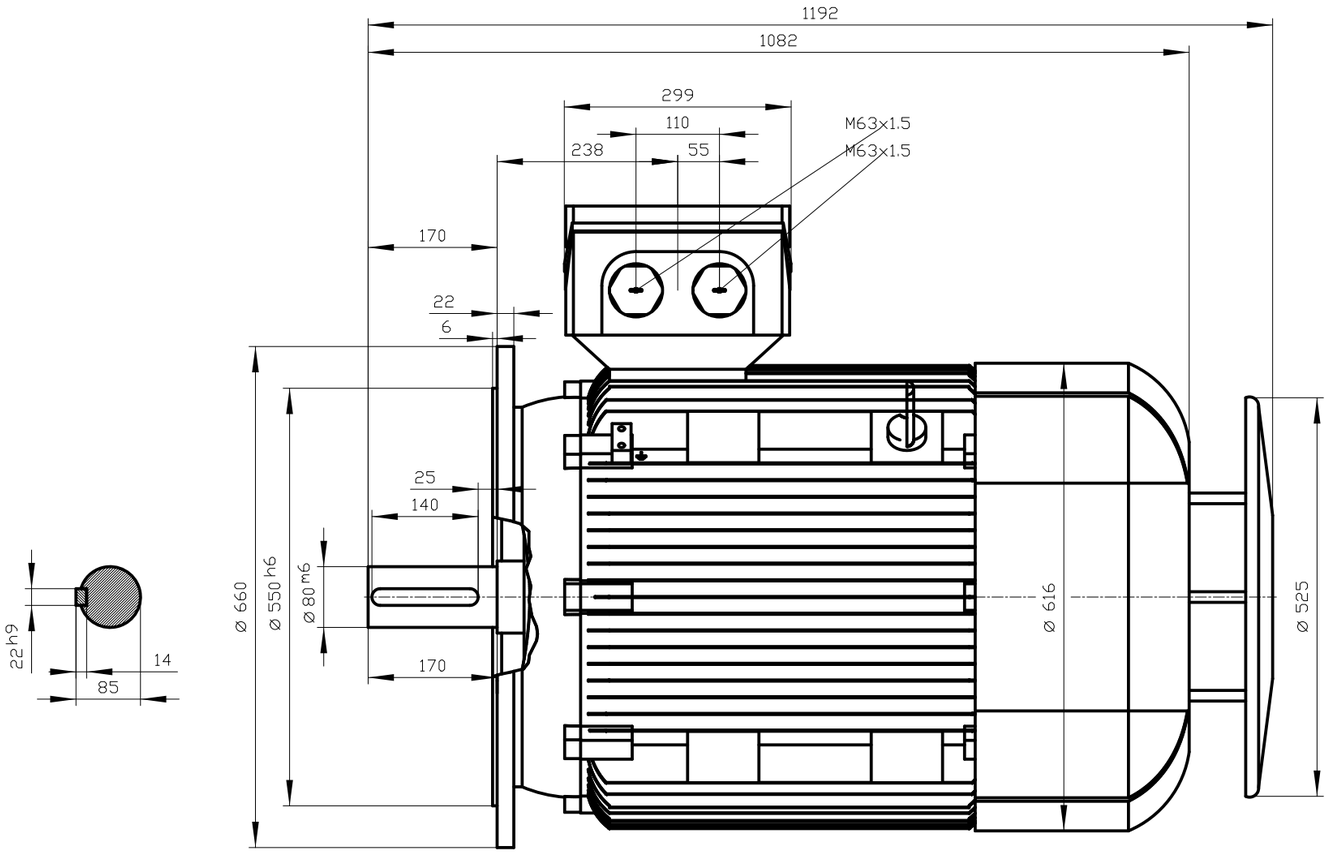

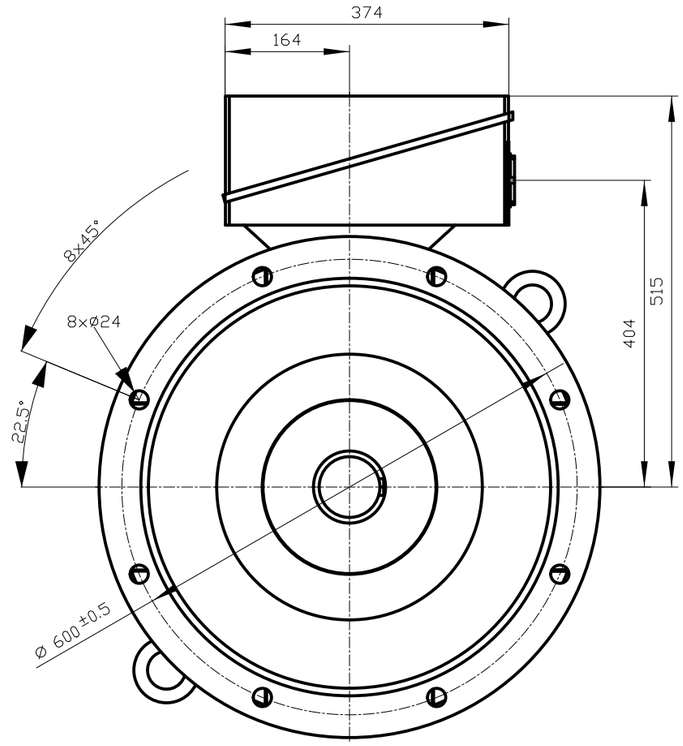

DIN 332-DR M20
DIN 6885 Teil1

Unit	mm
Date	3/9/16

rotor

6RN315M08E12 IM3011+Rf

H00

DT

This is an uncontrolled copy - document subject to change - alterations reserved without notice