This is an uncontrolled copy - document subject to change - alterations reserved without notice

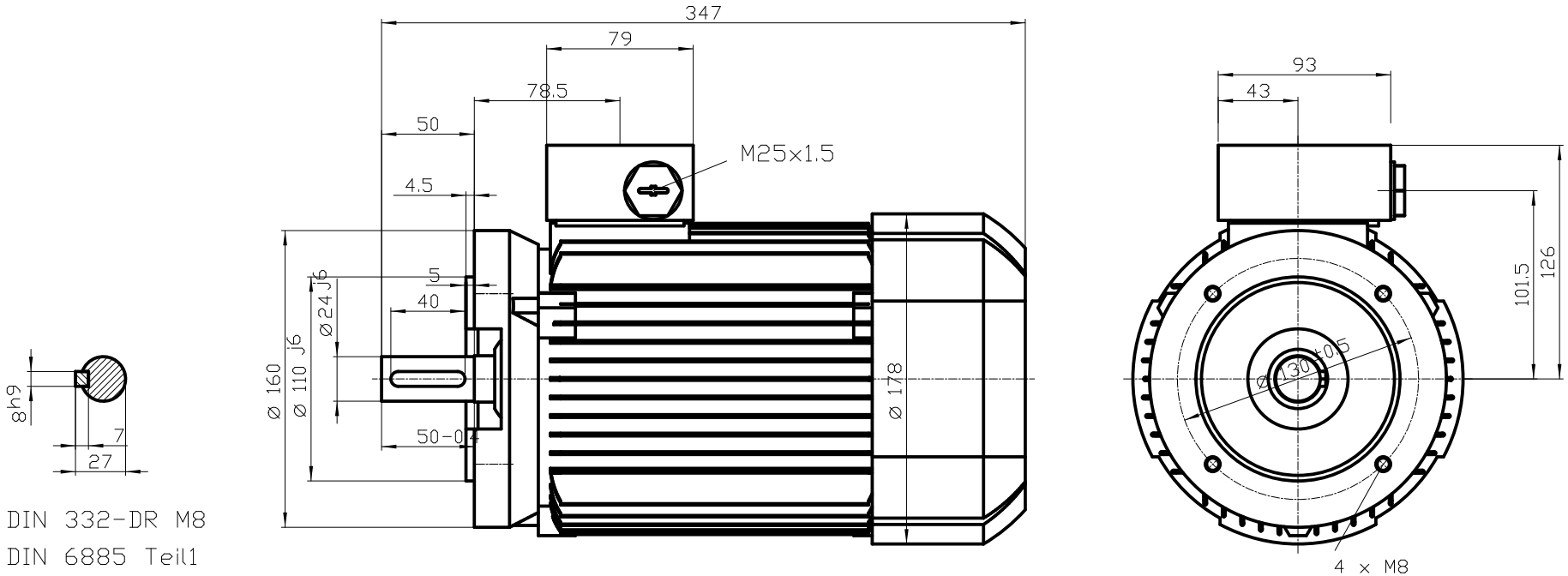

Unit	mm
Date	30.04.13

rotor

6RN90S06E20 B14B